VTR-A-3590 Precision Multiturn Wirewound Potentiometer

Multiturn/ Round/ Wirewound * 2 Shaft Styles

Electrical Characteristics	
Standard Resistance Range	100Ω - 100KΩ
Resistance Tolerance	±5%, ±2%
Independent Linearity	±0.5%
Effective Electrial Travel	⩾3600° ± 10°
Treninal Resistance	⩽2%R or 5Ω
	（whichever is larger）
Noise	⩽3% R or 5Ω
	（whichever is larger）
Insulation Resistance	R⩾1GΩ
Withstand Voltage	101.3kPa710V, 8.5kPa470V
Physical Characteristics	
Total Mechanical Travel	⩾3600° ± 10°
Staring Torque	⩽36mN·m
Clutch Torque	⩾300mN·m
Standard Packaging	20pcs/box or 25pcs/box

Environmental Characteristics	
Power Rating (max 500volts)	2W@+70℃, 0W@+125℃
Temperature Range	-55℃ ~ +125℃
Temperature Coefficient	⩽±50×10-6/℃（-55℃ ~ +125℃）
Temperature Variation	ΔR⩽±2%R. Δ(Uab/Uac)⩽±1%
Collision	390m/s2,4000cycles, R⩽1%R
Vibration	10-500Hz, 0.75mm, or 98m/s2, 6h
	ΔR⩽±1%R. Δ(Uab/Uac)⩽±2%
Climate Category	ΔR⩽±3%R. R1⩾100MΩ
Electrical Endurance at 70℃	2W, 1000h, ΔR⩽±3%R
Mechanical Endurance	10000 cycles, ΔR⩽±3%R
Steady damp-heat	ΔR⩽±3%R, R1⩾100MΩ

Common Dimensions

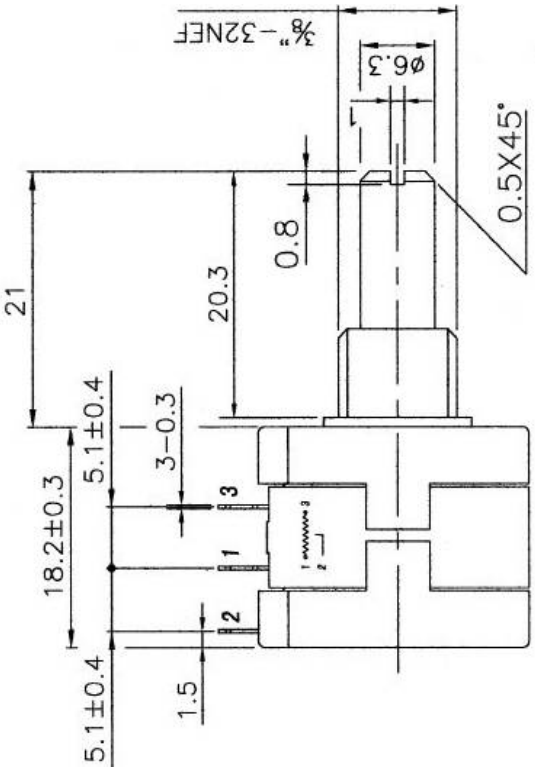

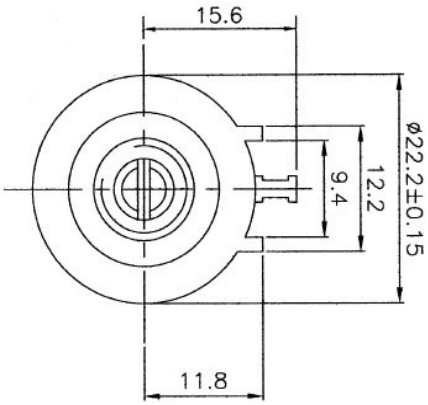

How To Order

VTR-A-3590S-103-R

Model

Style

Resistance

RoHS

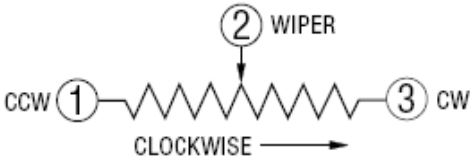

Vtrons Technology Co., Ltd.

Website: www.vtrons.com

Email: sales@vtrons.com

Add: Xihang Industrial Zone, Shuangliu, Chengdu, Sichuan Province, China